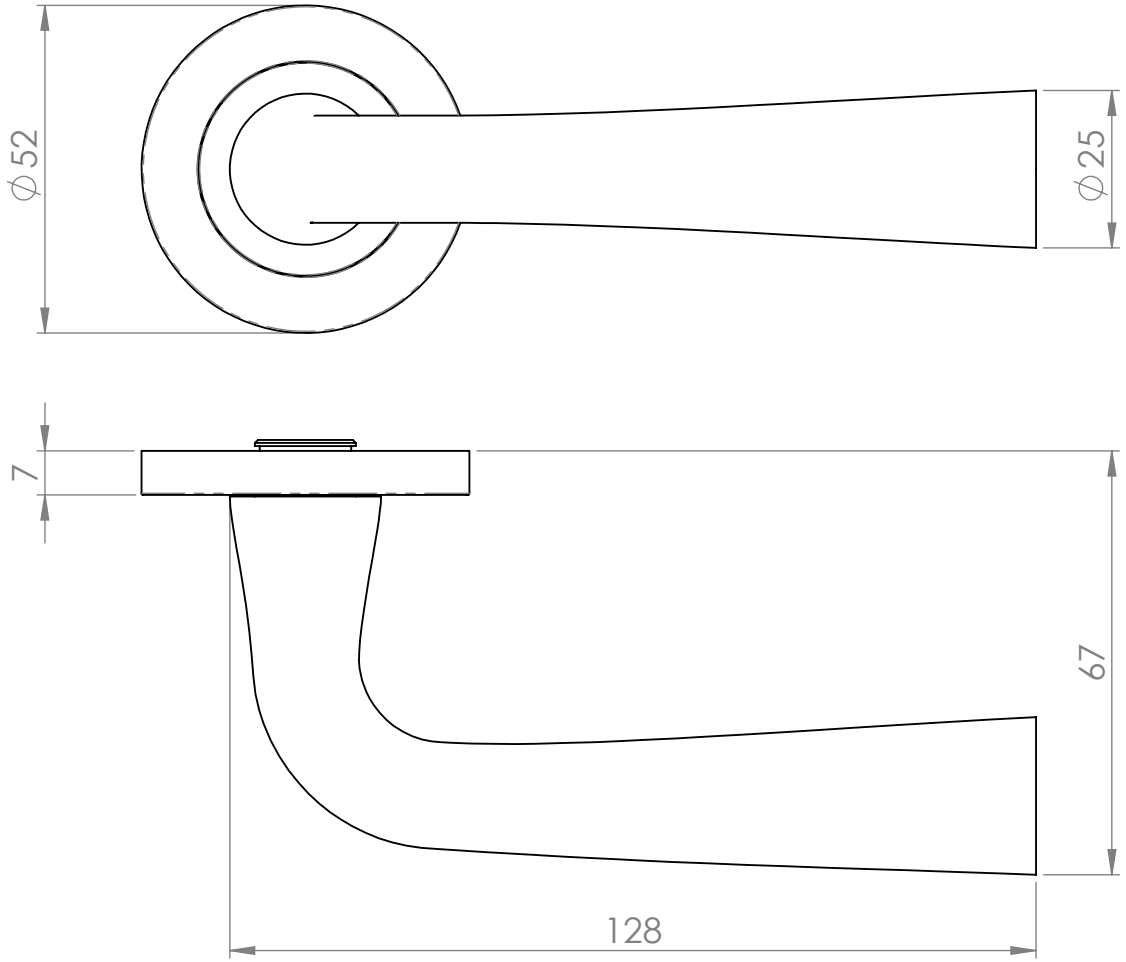

EUROSPEC

SWL1158
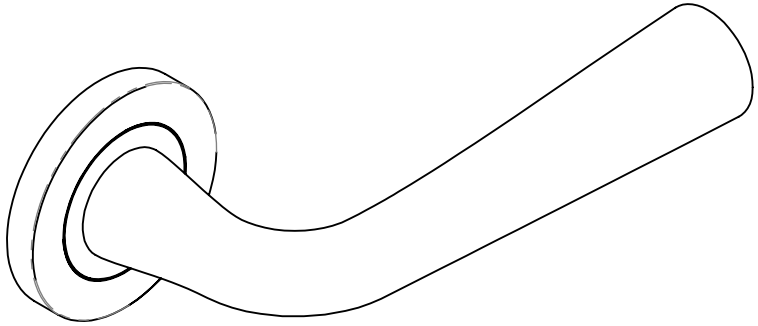
This drawing is the property of Carlisle Brass Limited, all design rights reserved