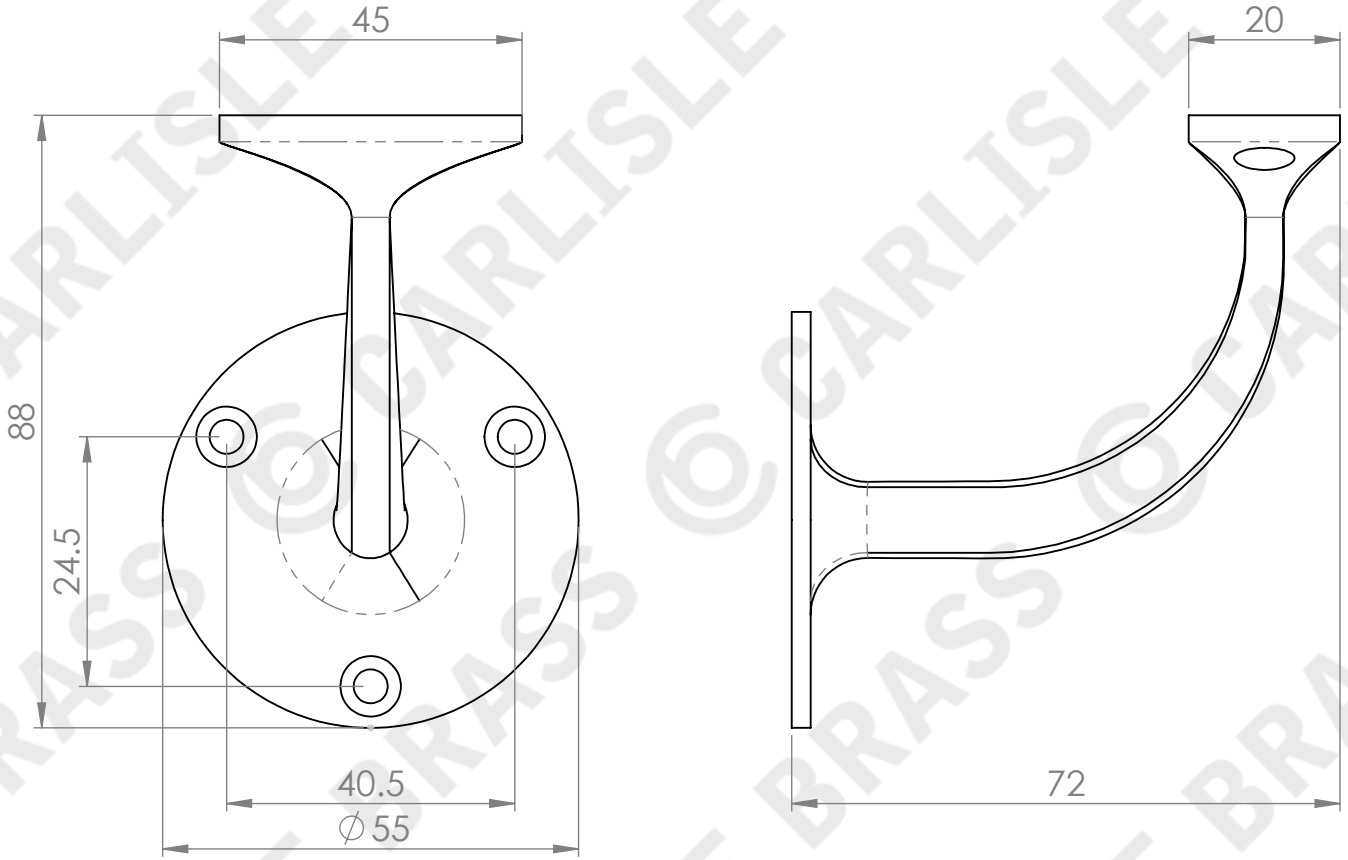

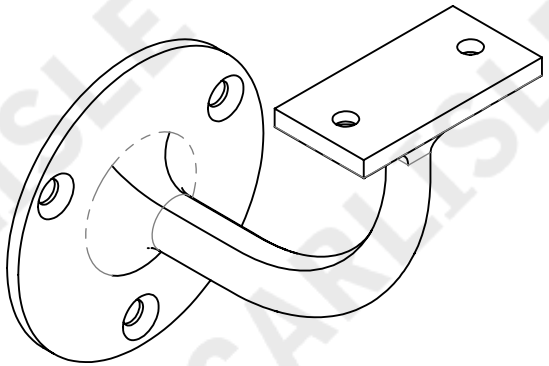

CARLISLE BRASS

AA85

This drawing is the property of Carlisle Brass Limited, all design rights reserved