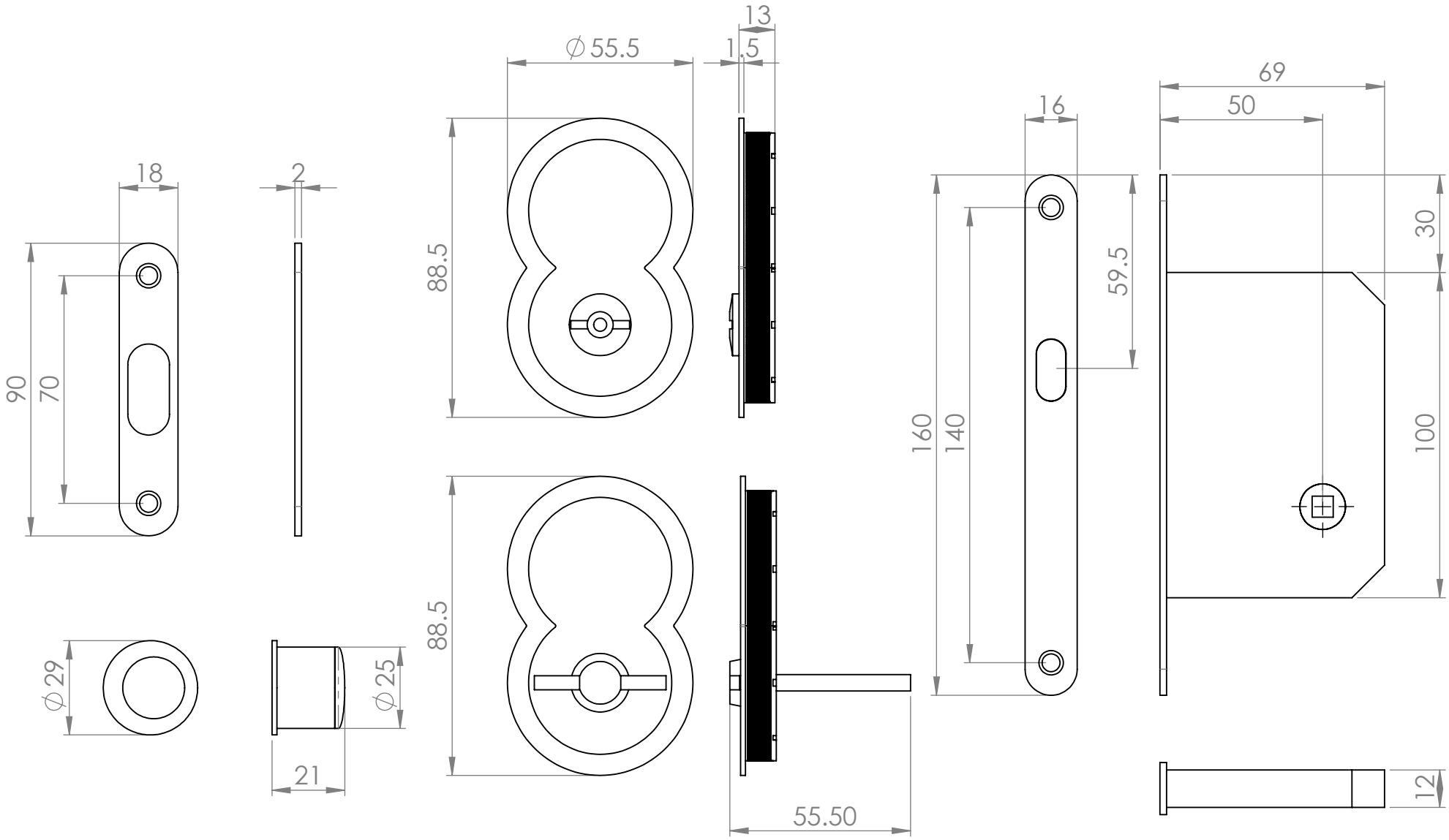

CARLISLE BRASS

ART85B

This drawing is the property of Carlisle Brass Limited, all design rights reserved