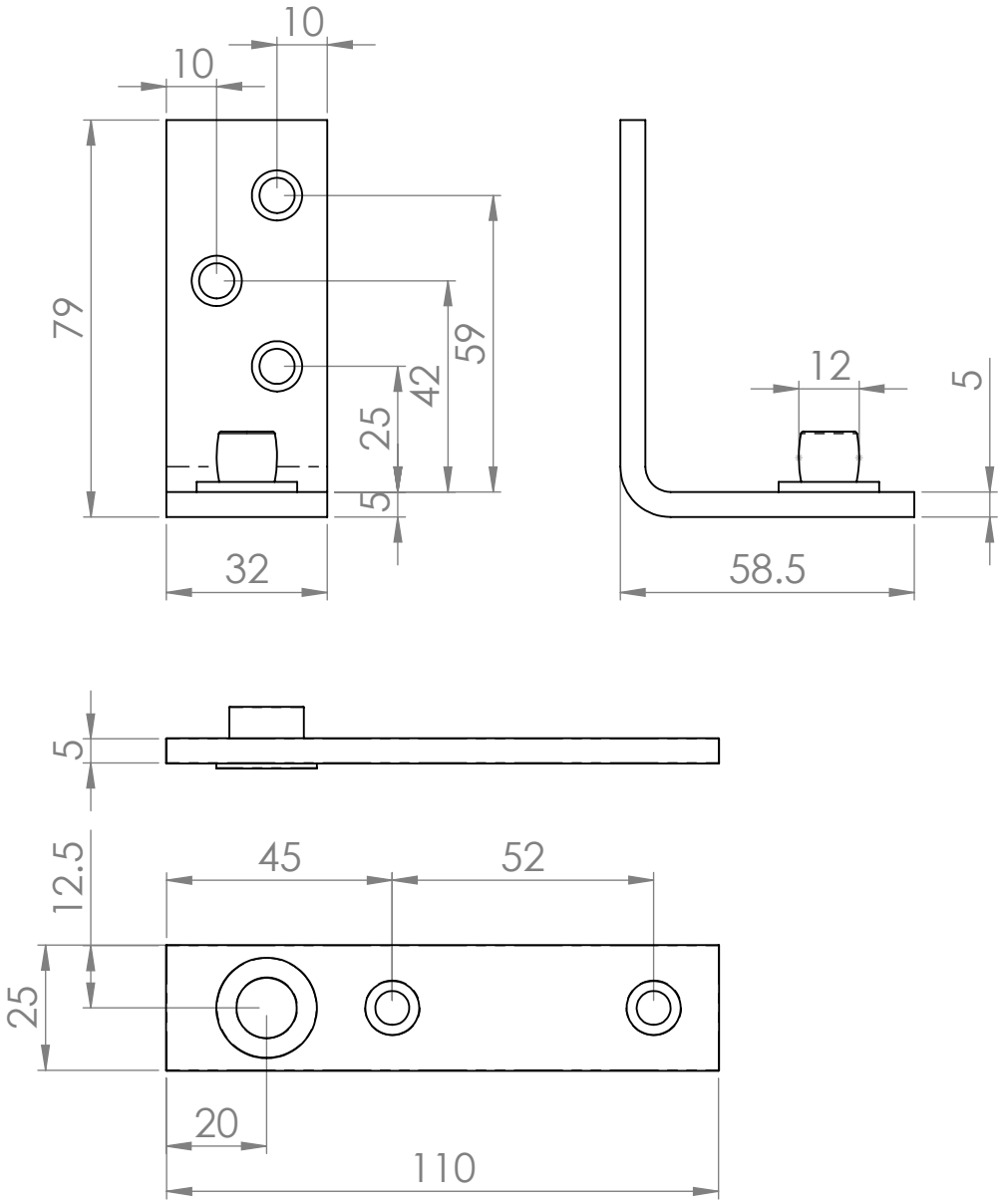

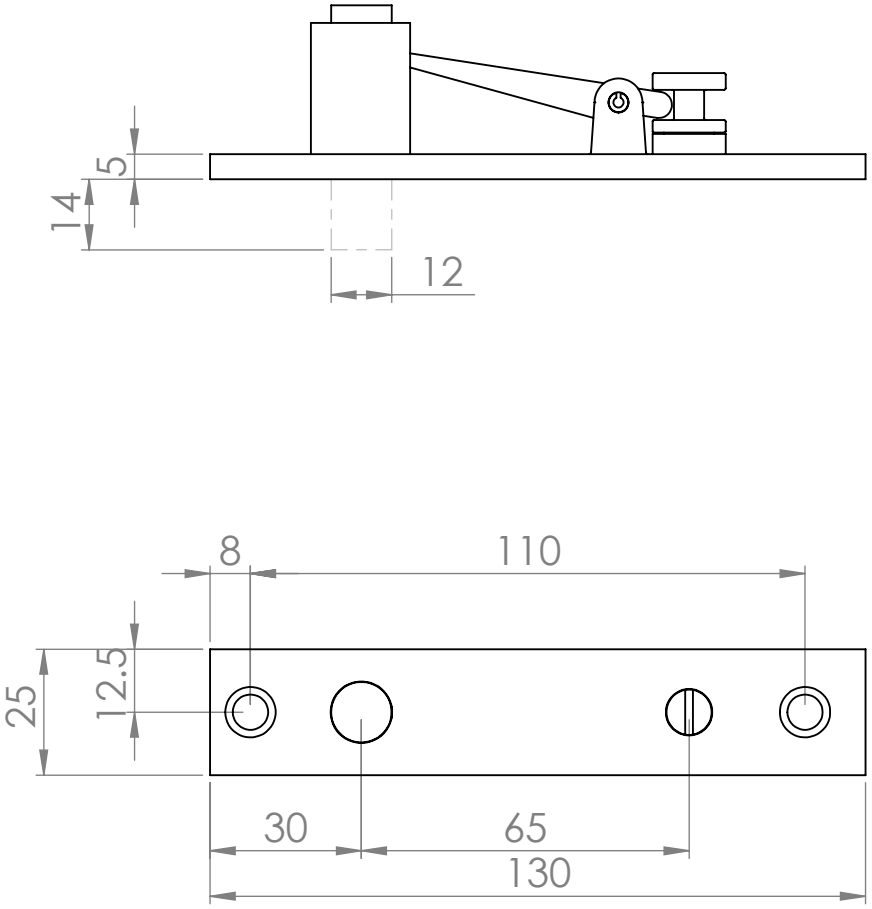

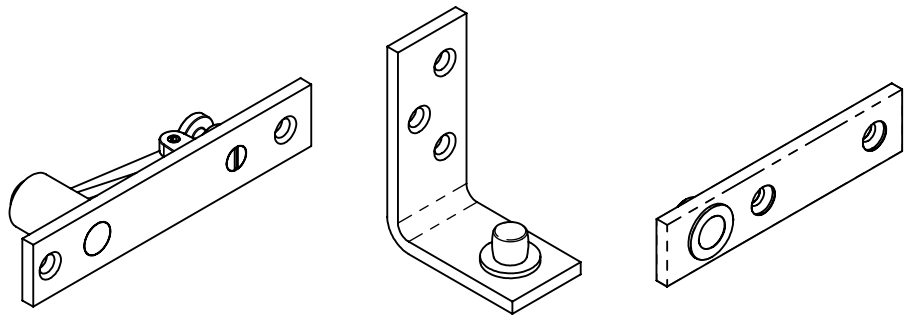

EUROSPEC

H2N1900

This drawing is the property of Carlisle Brass Limited, all design rights reserved