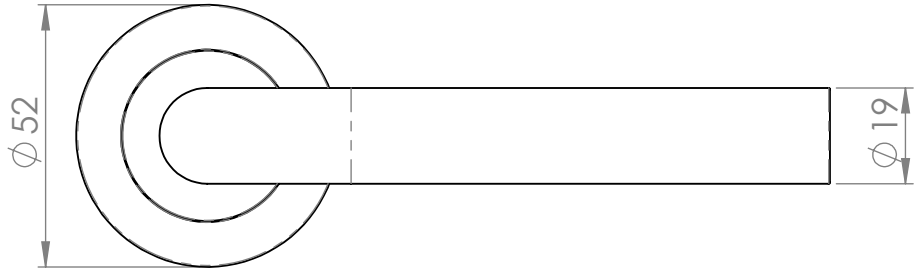

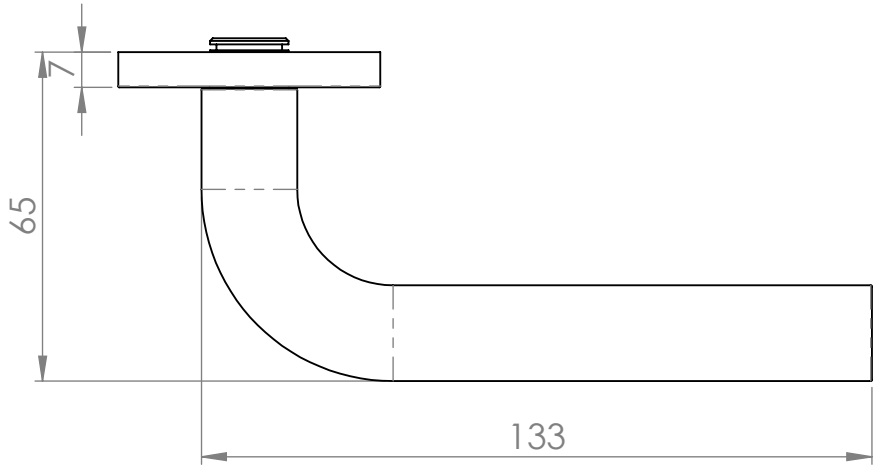

EUROSPEC

SWL1191
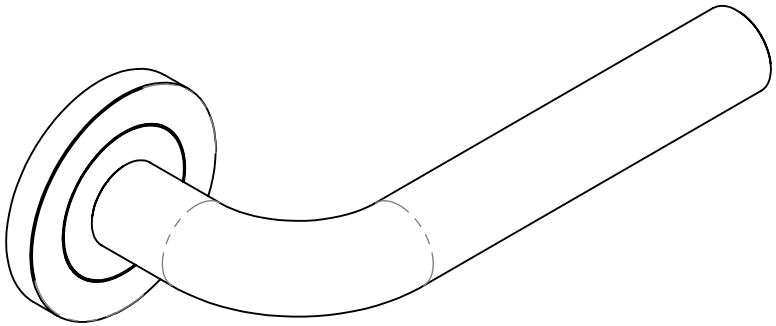
This drawing is the property of Carlisle Brass Limited, all design rights reserved