SEROZZETTA

Serozzetta Cuatro Lever on Round Rose

SZC040SC

SC

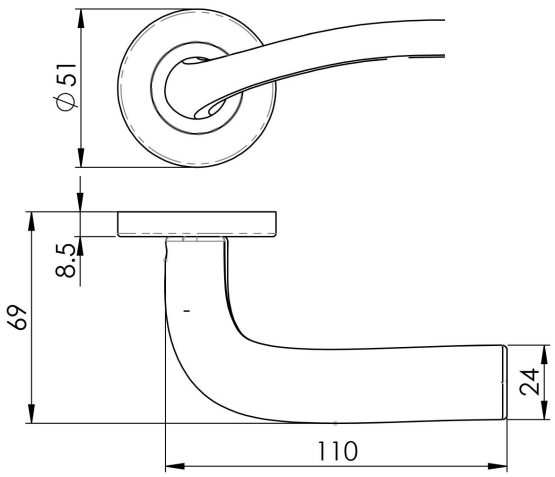

Lever on a concealed fix press on round rose. The slightly raised lever is almost flat with curved and smooth edges. Simple and ergonomic handle ideal for residential or commercial use. Comes with a 10 year mechanical guarantee and is Fire door rated.

10 YEAR · FD30 TIMBER · AVAILABLE IN PREPACK

Serozzetta products by CARLISLE BRASS

+44 1228 511030
Carlisle Brass Ltd, Parkhouse Road, Carlisle, CA3 0JU
enquiries@carlislebrass.com
www.carlislebrass.com