SEROZZETTA

Serozzetta Classic Lever On Rose

ZIN3117SC

SC

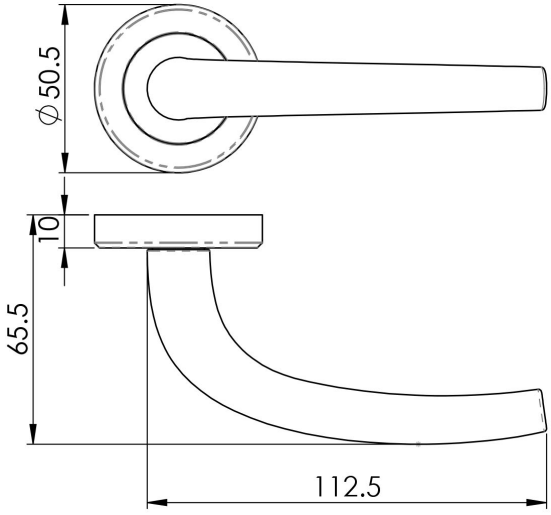

Lever on a concealed fix 2 part screw on round rose. A straight rounded lever on rose. The lever is curved on its horizontal axis. Part of the Serozzetta Zin lever designer collection.

10 YEAR

FD30/60 TIMBER

Serozzetta products by
CARLISLE BRASS

+44 1228 511030
Carlisle Brass Ltd, Parkhouse Road, Carlisle, CA3 0JU
enquiries@carlislebrass.com
www.carlislebrass.com