SEROZZETTA

Serozzetta Philadelphia Lever On Rose

ZIN3121SC

SC

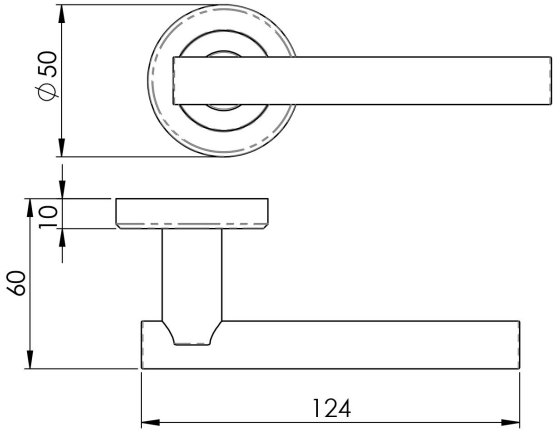

Lever on a concealed fix 2 part screw on round rose. A straight round bar lever on rose. Part of the Serozzetta Zin lever designer collection. Comes with a 10 year mechanical guarantee and is fire door rated.

10 YEAR
FD30/60 TIMBER
BEST SELLER

Serozzetta products by
CARLISLE BRASS

+44 1228 511030
Carlisle Brass Ltd, Parkhouse Road, Carlisle, CA3 0JU
enquiries@carlislebrass.com
www.carlislebrass.com