SEROZZETTA

Serozzetta Manon Lever on Rose Polished Chrome

ZIN3144PC

CP

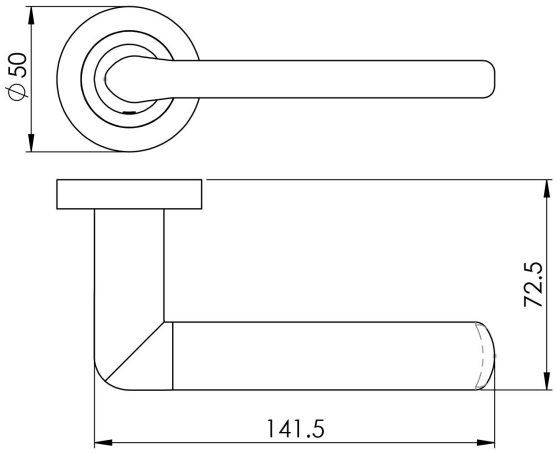

Lever on a concealed fix 2 part screw on round rose. A slender straight lever on rose. The lever has smooth rounded edges, a minimalist design. Part of the Serozzetta Zin lever designer collection.

10 YEAR

FD30/60 TIMBER

Serozzetta products by
CARLISLE BRASS

+44 1228 511030
Carlisle Brass Ltd, Parkhouse Road, Carlisle, CA3 0JU
enquiries@carlislebrass.com
www.carlislebrass.com